# PRODUCT SPECIFICATION SHEET

## UFO 21D Downlight

*Rev. C2*

A compact fixed lens downlight fitting, secured through ceiling with spring clips.

Available in a range of finishes, this fitting allows for the light beam to be focused. The fitting is also suitable for mounting in the base of a display case and illuminating upwards.

Our downlight fittings are suitable for use in a variety of different applications and are the ideal solution for the illumination of static objects within a display case or cabinet.

Glass lens available with stainless steel option, making it suitable for saunas, steam rooms & showers etc.

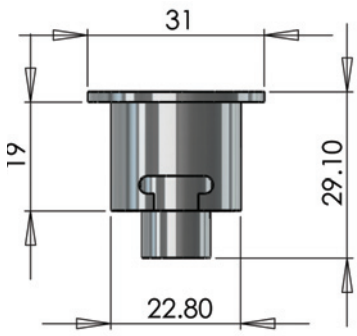


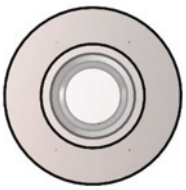

## TECHNICAL INFORMATION

| | |
|---|---|
| Lens | 18mm lens |
| Focus range | 30° - 60° |
| Material | Aluminium or stainless steel |
| Finishes available | Polished aluminium, stainless steel, chrome, black, white |
| Flange size | ø31mm |
| Weight | 18.9g |
| Mounting hole size | 26mm |
| Mounting | Recessed, held by springs |
| Ferrule size | M10 or 8mm smooth |
| Min. fibre size | 2mm |
| Max. fibre size | 8mm |

## ORDERING CODES

| MODEL | MATERIAL | | FINISH | | FERRULE SIZE | |
|---|---|---|---|---|---|---|
| UFO 21D | Aluminium | ALU | Aluminium | ALU | M10 | M10 |
| | Stainless Steel | SS | Black | BL | 8mm | 8mm |
| | | | White | WH | | |
| | | | Stainless Steel | SS | | |
| | | | Chrome | CH | | |
| UFO 21D | | | | | | |

Universal Fibre Optics Ltd
Home Place \ Coldstream
TD12 4DT \ UK
+44 (0)1890 883416 \ www.ufo.lighting

Universal Fiber Optic Lighting USA, LLC
1749 Northgate Blvd
Sarasota \ FL34234 \ USA
941-343-8115 \ www.fiberopticlighting.com

UFO Licht GmbH
Andreasstraße 20
93059 Regensburg \ Deutschland
+49 (0)9491 955880 \ www.ufo-licht.de